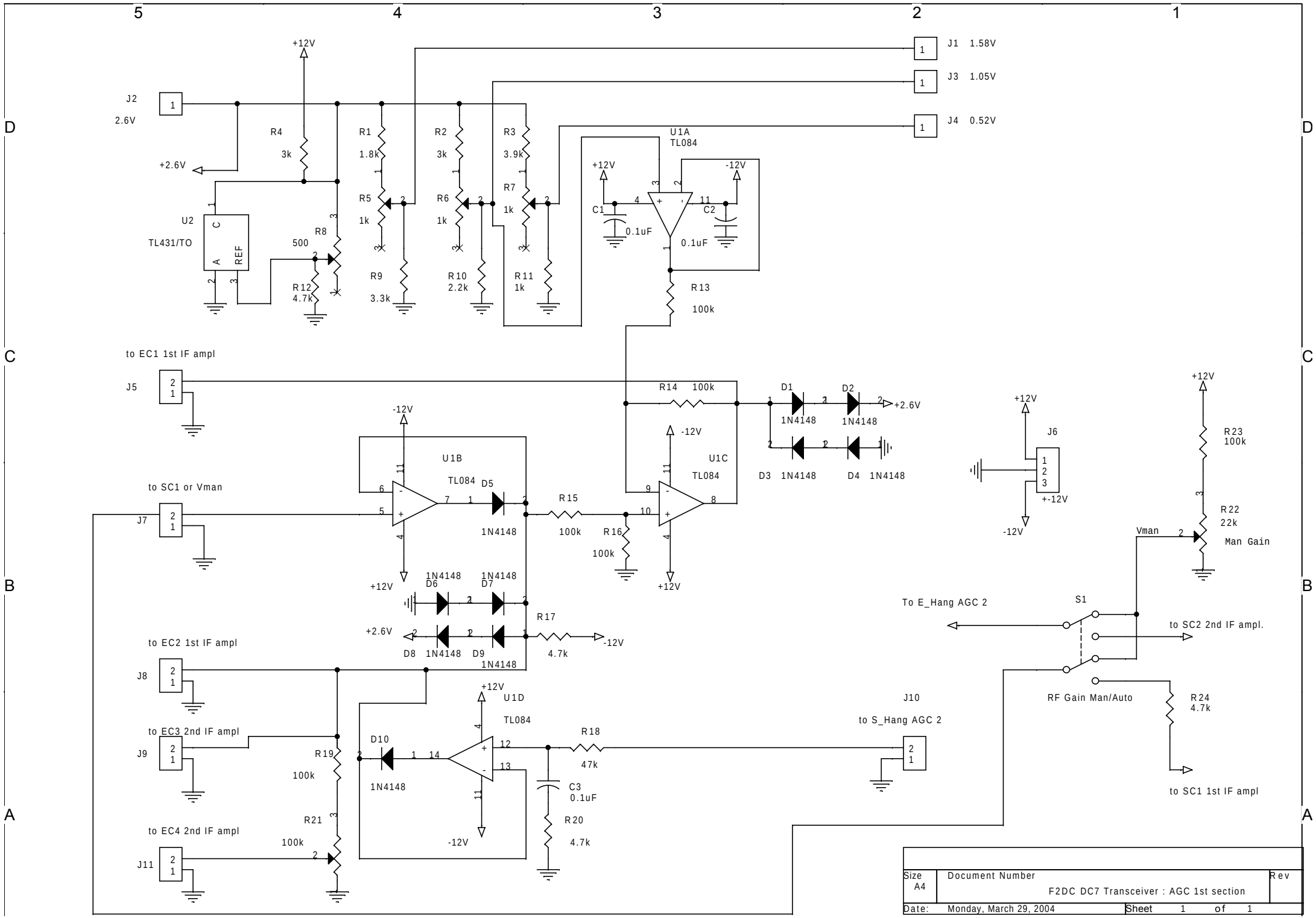
J1 1.58V
J3 1.05V
J4 0.52V
J2
2.6V
+2.6V
+12V
R4 3k
R1 1.8k
R2 3k
R3 3.9k
R5 1k
R6 1k
R7 1k
R8 500
R9 3.3k
R10 2.2k
R11 1k
R12 4.7k
U2
TL431/TO
C
A
REF
U1A
TL084
-12V
C1 0.1uF
C2 0.1uF
R13 100k
to EC1 1st IF ampl
J5
R14 100k
D1 1N4148
D2 1N4148
D3 1N4148
D4 1N4148
+2.6V
U1B
TL084
D5 1N4148
U1C
TL084
to SC1 or Vman
J7
R15 100k
R16 100k
J6
+-12V
R23 100k
R22 22k
Man Gain
Vman
D6 1N4148
D7 1N4148
D8 1N4148
D9 1N4148
R17 4.7k
To E_Hang AGC 2
S1
to SC2 2nd IF ampl.
to EC2 1st IF ampl
J8
RF Gain Man/Auto
R24 4.7k
to SC1 1st IF ampl
U1D
TL084
J10
to S_Hang AGC 2
to EC3 2nd IF ampl
J9
D10 1N4148
R18 47k
R19 100k
C3 0.1uF
R20 4.7k
R21 100k
to EC4 2nd IF ampl
J11
Size A4
Document Number
F2DC DC7 Transceiver : AGC 1st section
Rev
Date: Monday, March 29, 2004
Sheet 1 of 1