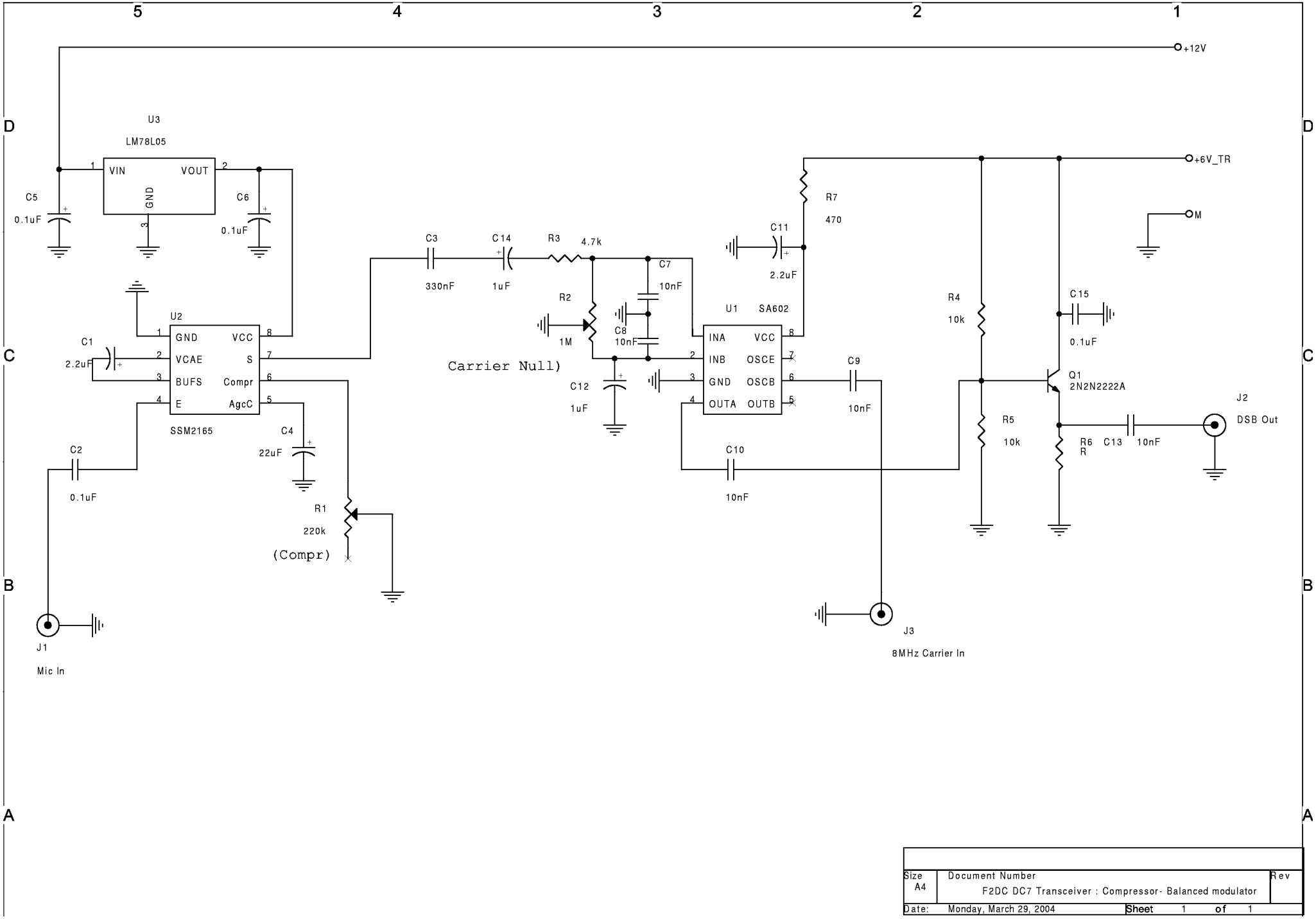

Size	Document Number	Rev
A4	F2DC DC7 Transceiver : Compressor- Balanced modulator	
Date: Monday, March 29, 2004	Sheet 1 of 1	